AGE DEPENDENT METABOLISM AND DOSIMETRY OF BONE SEEKING RADIONUCLIDES

J.R. Johnson
Biomedical Research Branch
Atomic Energy of Canada Limited
Chalk River Nuclear Laboratories
Chalk River, Ontario K0J 1J0 Canada

Age dependent metabolic and dosimetric models and parameters are required to calculate doses from intakes of radionuclides that occur in the environment, either naturally or from man's past, present or future activities. One class of radionuclides that require special attention in age dependent models are the so-called bone seekers, as they tend to be retained in bone for periods of time long compared to the time it takes for bone metabolism and bone structure to change significantly.

The ICRP has recently published (1) a review of recommended metabolic and dosimetric models and parameters for use in internal dosimetry calculations for occupational exposures. That review recommended the metabolic model developed by a Task Group of ICRP (2) for use with alkaline earth elements and used the concepts of bone compartmentalization from this model for doing dosimetry calculations for bone seeking radionuclides other than the alkaline earths (about one half of the elements). The compartmentalization considers the bone to be composed of three source organs (bone surfaces, cortical bone and cancellous bone) and two target organs (bone surfaces and red bone marrow). This poster describes work being done at the Chalk River Nuclear Laboratories in extending the alkaline earth model of bone metabolism to other bone seeking radionuclides, and in extrapolating this model to include ages from birth to adulthood, so that the same dosimetric model can be used for all bone seeking radionuclides and for all age groups.

The alkaline earth metabolic model (2) has been reformulated by Johnson and Myers (3) to make it a first order compartment model (see Figure 1) for which solutions can be easily obtained for any boundary (exposure) conditions by numerical methods. In addition, progress on extending this model to include the effects of age on alkaline earth model parameters and on dosimetry calculations have been reported (4) and Table 1 gives the current estimates of the integrated activities in the bone source organs, and committed doses (5, 6) to the bone target organs for the one year old infant and for the adult (Reference Man) for the important alkaline earth radionuclides. These calculations are performed by first deriving age dependent functions for the rate constants (λ_i, α_i , β_i and σ_i of Fig. 1) for each alkaline earth element (as well as age dependent lung and GI tract models) and then using these with age dependent factors ($S_{ij}(A)$, or S factors) that give the dose to the target organ (j) per unit of integrated activity in the source organ (i) to calculate age dependent committed doses. These committed doses have been shown (6) to be an adequate approximation to either the average committed dose to end of life from a single intake or the average equilibrium dose rate from chronic intake for population exposures. More exact calculations can also be done. That is, the results given in Table 1 are obtained from calculations of the form

$$D50_j = \sum_i S_{ij}(A_o) \int_0^{50\ y} R_i(A_o,t)\ dt$$

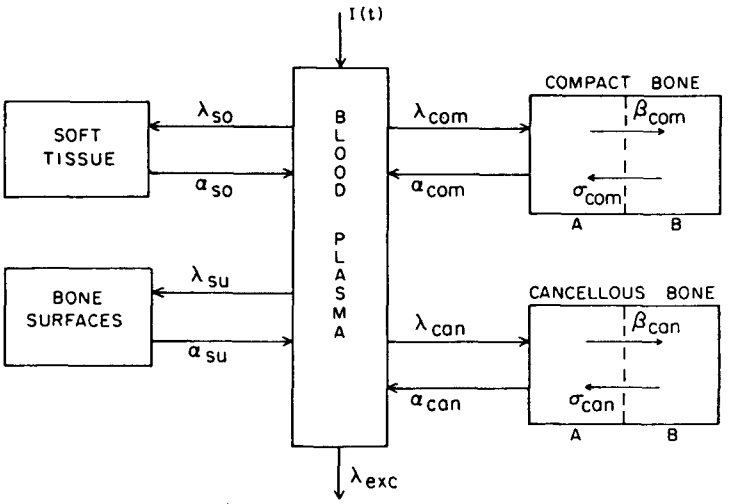

FIGURE 1 First order compartment model used to describe alkaline earth metabolism and bone remodelling in man.

where $S_{ij}(A\ )$ is the S factor for the age (A_o) of intake, and $R_o(A_o,t)$ is the retention function for the age at intake as a function of time after a pulse intake. This formulation assumes that bone metabolism and structure is constant and equal to that at the age of intake, which overestimates the committed dose to the one year old infant. A more exact expression for the dose to an age A from any intake pattern is

$$D_j(A) = \int_0^A \dot{D}_j\ (a)\ da$$

$\dot{D}_j(a)$ is the dose rate to target organ j at age a, given by

$$\dot{D}_j(a) = \sum_i S_{ij}(a) \int_o^a I(a')\ R_i(a',\ a-a')\ da'$$

where I(a') is the intake rate at age a' and $R_i(a',a-a')$ is the retention in source organ i at age a' and time a-a' since a pulse intake. Space limitations do not allow the inclusion of results obtained with these equations in this paper, but they will be presented in the poster.

Solutions to the above equations can easily be obtained by numerical methods once functions for $S_{ij}(a)$ and R(a,t) are

TABLE 1 The Q50's are the integrated activities on bone surfaces (BS) and in cancellous (Can) and cortical (Cor) mineral bone. The D50's are the committed dose equivalents to the target organs, bone surfaces (BS) and red bone marrow (RBM). Class refers to the ICRP inhalation class (D or W) or ingestion (I). F1 is the fraction of activity that enters the GI tract that is absorbed in blood. Values in parentheses are powers of 10 (i.e. (-9) = x 10^{-9}).

Isotope	Class	F1	INFANT					ADULT				
			Q50(d)			D50 (Sv Bq^{-1})		Q50(d)			D50 (Sv Bq^{-1})	
			BS	Can	Cor	BS	RBM	BS	Can	Cor	BS	RBM
Calcium-41	W	0.3	2.9	8.8(1)	9.0(1)	9.8(-9)	5.8(-9)	2.7	1.5(2)	4.5(2)	3.1(-9)	1.2(-9)
	I	0.3	3.9	1.20(2)	1.20(2)	1.3(-8)	7.9(-9)	3.7	2.01(2)	6.2(2)	4.2(-9)	1.7(-9)
Strontium-85	D	0.3	4.2(-1)	9.8	8.5	1.0(-8)	8.0(-9)	6.4(-1)	2.7	4.0	9.4(-10)	2.3(-10)
	I	0.3	2.9(-1)	6.7	5.8	6.8(-9)	5.5(-9)	4.4(-1)	1.9	2.8	6.6(-10)	5.7(-10)
Strontium-89	D	0.3	4.0(-1)	8.1	7.2	1.8(-7)	1.3(-1)	6.3(-1)	2.2	3.3	8.0(-9)	5.1(-9)
	I	0.3	2.8(-1)	5.6	4.9	1.2(-7)	9.1(-8)	4.3(-1)	1.5	2.3	5.4(-9)	3.5(-9)
Strontium-90	D	0.3	8.3(-1)	7.0(1)	4.8(1)	2.7(-6)	2.2(-6)	8.1(-1)	6.5(1)	1.6(2)	5.4(-7)	2.4(-7)
	I	0.3	5.6(-1)	4.7(1)	3.3(1)	1.9(-6)	1.5(-6)	5.5(-1)	4.4(1)	1.1(2)	3.7(-7)	1.6(-7)
Barium-140	D	0.1	1.0(-1)	4.4(-1)	4.9(-1)	2.0(-8)	1.3(-8)	1.1(-1)	1.7(-1)	2.5(-1)	1.5(-9)	8.7(-10)
	I	0.1	2.5(-2)	1.0(-1)	1.2(-1)	4.8(-9)	3.1(-9)	2.7(-2)	4.0(-2)	5.9(-2)	4.0(-10)	3.8(-10)
Radium-223	W	0.2	1.0(-1)	9.9(-2)	1.1(-1)	1.5(-5)	1.3(-6)	1.0(-1)	1.4(-2)	2.5(-2)	1.6(-6)	1.3(-7)
	I	0.2	1.7(-1)	1.6(-1)	1.8(-1)	2.4(-5)	2.0(-6)	1.8(-1)	2.6(-2)	4.5(-2)	2.8(-6)	2.3(-7)
Radium-224	W	0.2	5.4(-2)	2.5(-2)	2.8(-2)	7.4(-6)	6.1(-7)	5.4(-2)	3.6(-3)	6.3(-3)	8.3(-7)	6.7(-8)
	I	0.2	1.0(-1)	4.7(-2)	5.3(-2)	1.4(-5)	1.1(-6)	1.1(-1)	7.1(-3)	1.3(-2)	1.7(-6)	1.3(-7)
Radium-225	W	0.2	1.1(-1)	1.3(-1)	1.5(-1)	9.8(-6)	8.7(-7)	1.1(-1)	2.0(-2)	3.4(-2)	8.8(-7)	7.1(-8)
	I	0.2	1.8(-1)	2.1(-1)	2.3(-1)	1.2(-5)	1.1(-6)	2.0(-1)	3.4(-2)	5.9(-2)	1.1(-6)	9.1(-8)
Radium-226	W	0.2	2.4(-1)	2.4	2.5	2.3(-5)	2.5(-6)	2.4(-1)	4.7	1.1(1)	6.3(-6)	5.2(-7)
	I	0.2	2.6(-1)	2.6	2.8	2.5(-3)	2.7(-6)	2.6(-1)	5.1	1.2(1)	6.8(-6)	5.7(-7)
Radium-228	W	0.2	2.4(-1)	2.2	2.3	1.2(-5)	1.3(-6)	2.4(-1)	2.2	3.1	5.1(-6)	5.1(-7)
	I	0.2	2.6(-1)	2.4	2.5	1.1(-5)	1.2(-6)	2.6(-1)	2.4	3.4	5.4(-6)	5.3(-7)

available, and I(a) has been specified. The $S_{ij}(a)$ can be calculated from knowledge of the change in the bone mass and change in the fraction of energy deposited with changes in source-target geometry with age. In this work, it is assumed (following work by Spiers (7) and Snyder (8)) that the fraction of energy deposited in the target organs varied linearly from 1.2 times the value for adults (1) at birth to 1 times the value for adults at age 20. The mass of the target organs was assumed to be directly proportional to the mass of calcium in bone, as estimated by the age dependent model.

The age dependences of the R(a,t)'s for the alkaline earth elements have been estimated as follows. Calcium in bone as a function of age reported by Mitchell (9) was compared to model calculations for a calcium intake by ingestion taken from ICRP Publication 23 (10) and the model parameters adjusted to give a good fit using FORSIMOPT (11). Next, comparison between the bomb fallout Sr-90 age and time dependent intake and bone content reported by Papworth and Vennart (12) and the model results was used to modify the age dependent parameters derived for calcium to get age dependent strontium parameters. Age dependent radium parameters were estimated from the results reported by Harrison et al. (13) for Ca-47, Sr-85 and Ra-223 in adults, combined with the age dependence derived for calcium and strontium as explained above. Finally, age dependent barium parameters were "questimated" from the results of the calcium, strontium and radium calculations.

The results of the age dependent bone remodelling developed for the alkaline earth is now being used along with other element specific data to derive better bone metabolism models for other elements. Progress to date on these models will be presented at the poster session.

REFERENCES

1. ICRP Publication 30, Pergamon Press, Oxford, 1979.
2. ICRP Publication 20, Pergamon Press, Oxford, 1973.
3. J.R. Johnson and R.C. Myers, Rad. Prot. Dos. 1, (2), 87, 1981.
4. J.R. Johnson, Health Physics 44, 91, 1983.
5. J.R. Johnson and D.W. Dunford, Atomic Energy of Canada Limited, Report AECL-7919, 1983.
6. J.R. Johnson, Rad. Prot. Dos. 3, (1/2), 47, 1982.
7. F.W. Spiers, Br. J. Radiology 47, 833, 1974.
8. W.S. Snyder, Lecture given at the 2nd Int. Summer School on Radiation Protection, Yugoslavia, 1973.
9. H.H. Mitchell, T.S. Hamilton, F.R. Steggerda and H.W. Bean, J. Biological Chemistry 158, 625, 1945.
10. ICRP Publication 23, Pergamon Press, Oxford, 1975.
11. M.B. Carver, Math. Comput. Simulation XXII, 298, 1980.
12. D.G. Papworth and J. Vennart, Phys. Med. Biology 18, 7, 1973.
13. G.E. Harrison, T.E. Carr, A. Sutton and J. Rundo, Nature, 209, 526, 1966.